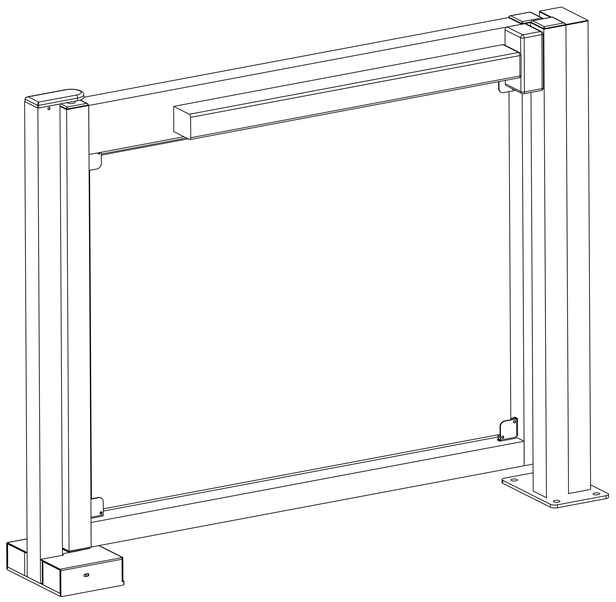

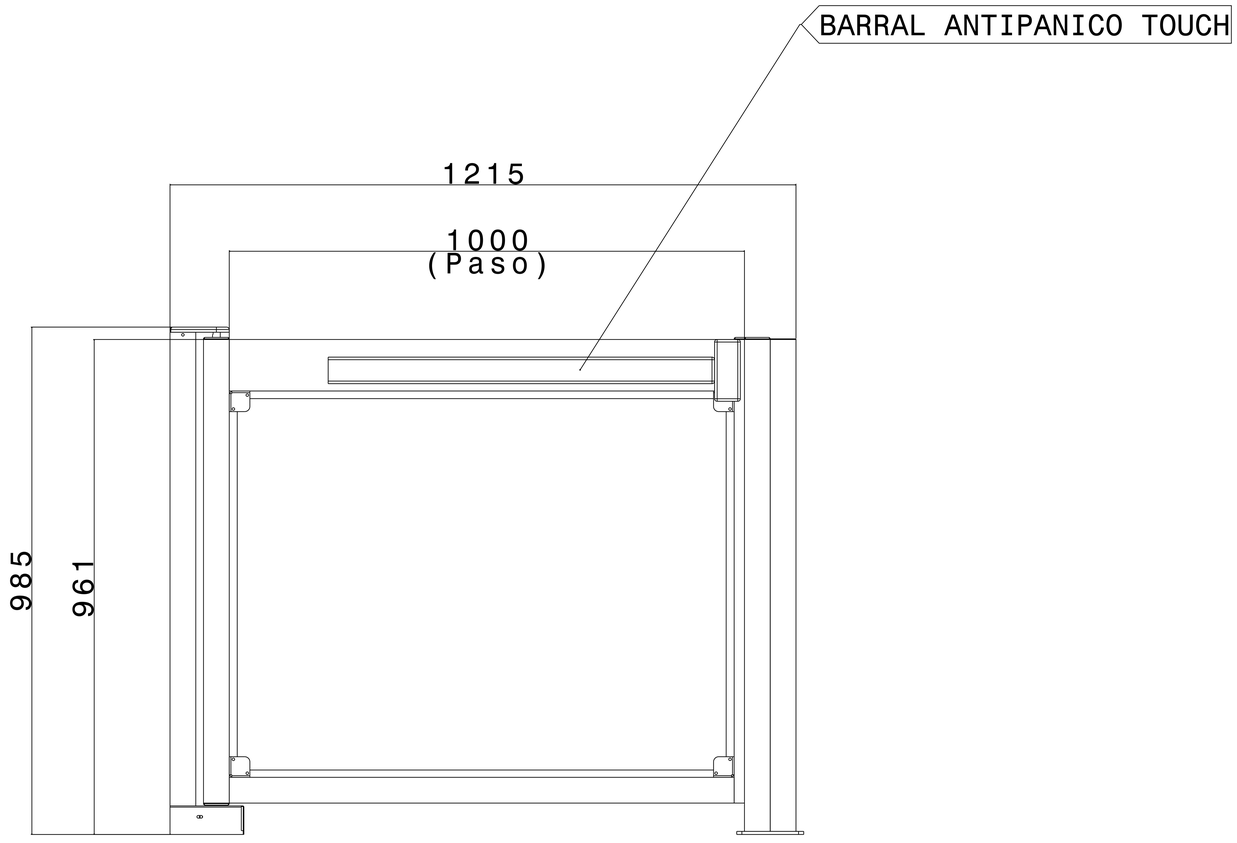

This drawing is our property.
It can't be reproduced
or communicated without
our written agreement.

DCM solution

DCM SOLUTION

DRAWING TITLE

Conjunto GM110

DRAWN BY Claudio	DATE 30/12/2022		
CHECKED BY XXX	DATE XXX	SIZE User	DRAWING NUMBER	REV X
DESIGNED BY XXX	DATE XXX	SCALE 1:1	WEIGHT(kg) 345,01	SHEET 1/1